HANDBOOK OF HYDRAULIC RESISTANCE

4TH REVISED AND AUGMENTED EDITION

I. E. IDELCHIK

Moscow

4TH EDITION EDITORS

A. S. GINEVSKIY AND A. V. KOLESNIKOV
Central Aero-Hydrodynamics Institute (TsAGI)
Moscow

TRANSLATED BY

GRETA R. MALYAVSKAYA and NATALIA K. SHVEYEVA
A. V. Luikov Heat and Mass Transfer Institute
Minsk

ENGLISH EDITION EDITOR

WILLIAM BEGELL
New York

begell house, inc.
New York · Connecticut · Wallingford (U.K.)

Handbook of Hydraulic Resistance 4th Edition Revised and Augmented
Series Editors: A. S. Ginevskiy and A.V. Kolesnikov

Handbook of Hydraulic Resistance
I. E. Idelchik

Direct inquires to Begell House, Inc., 50 Cross Highway, Redding, CT 06896.

ISBN: 978-1-56700-251-5
Printed in the United States of America 1 2 3 4 5 6 7 8 9 0

Library of Congress Cataloging-in-Publication Data

Idel_chik, I. E.
[Spravochnik po gidravlicheskim soprotivleniiam. English]
Handbook of hydraulic resistance / I. E. Idelchik ; editors, A.S. Ginevskiy ... [et al.] ; translated by Greta R. Malyavska. -- 4th ed. rev. and augmented
p. cm.
Includes bibliographical references and index.
ISBN 978-1-56700-251-5 (alk. paper)
1. Fluid dynamics. 2. Frictional resistance (Hydrodynamics) I. Ginevskii, A. S. (Aron Semenovich) II. Title.

TA357.I3413 2008
620.1'064--dc22
2008000963

TABLE OF CONTENTS

EDITOR'S PREFACE

The first edition of the *Handbook of Hydraulic Resistance* has been used by knowledgeable engineers in English-speaking countries since 1966, when an English translation sponsored by the U.S. Atomic Energy Commission became available. Although the book was not readily available or publicized, its extensive coverage and usefulness became known through citation, reference, and personal recommendations to a limited body of engineering practitioners in the Western world.

Because there exists no English-language counterpart to Professor Idelchik's book, the translation and publication of the revised and augmented second edition of the Handbook of Hydraulic Resistance has been undertaken. The extensive coverage provided by this book becomes self-evident when one reviews the hundreds of illustrations of flow passages contained herein. Most of these are sufficiently basic to allow application to nearly any shape of flow passage encountered in engineering practice.

The editor of this translation has had extensive experience in using the first edition and has learned to appreciate not only the extent of coverage of this book but also its limitations. Based on this experience, the editor has tried to utilize American terminology whenever necessary for clarity while trying to preserve the original manuscript as faithfully as possible. Sometimes this resulted in overly detailed description, and the temptation always existed to rewrite or condense some of the explanatory chapters and sections. However, since this is a translation, the original was followed as faithfully as possible in order to maintain the author's style and approach. In the text the flow passages of interest are variously described as pipelines, ducts, conduits, or channels — all denoting an internal flow passage or pipe. Similarly, there are references to gas, air, steam, and water, when the term *fluid* would have been quite adequate in most cases. Since retaining the original translated terms did not affect the technical correctness of the text, changes were made only in isolated cases.

Section 1.1 provides general directions for using the book, allowing readers to make their own interpretation. The majority of readers may wish to use this handbook primarily as a source book for pressure loss or hydraulic resistance coefficients,

applying these coefficients in their own accustomed way. The editor believes that these users may benefit from the few observations that follow.

The many sketches, diagrams, and graphs are self-explanatory, with flow directions and areas indicated. The values of pressure loss coefficients may be used over the limits indicated for the particular graph. The nondimensionality of the parameters of most graphs allows them to be used in the English system as well as the metric system. This permits interchangeable use of this book with other sources of pressure loss coefficients.

It should be noted that, unless otherwise stated, the data apply to Newtonian fluids considered as incompressible. It is also assumed, unless otherwise stated, that the inlet conditions and exit conditions are ideal; that is, there are no distortions. Very few experimental data exist on the effect of inlet flow distortion on the pressure loss coefficient for most flow devices.

Where friction factors are required to find the overall pressure loss coefficient of a component, the values obtained by the favored sources most familiar to the reader may be used in place of the data shown herein. Particular attention should be paid to the limits of applicability of the data provided as well as to the reference flow area used, when there is a flow area change. Much of the data are shown in tabular as well as graphical form. The former allows use of computers in the interpolation of intermediate values.

In any compilation of empirical data, the accuracy decreases with increasing complexity of the component, due to analytical and experimental uncertainties. This book is no exception. A good rule to follow is to check more than one source, if possible.

Although there will be many flow configurations for which no explicit resistance values are given in this book, it is entirely possible to make up combinations of simple shapes to simulate a complex component, provided suitable engineering judgment is applied. The latter, of course, requires familiarity with the way the data are presented and with the effect of exit conditions from one component on the inlet conditions of the adjacent component.

The editor of this translation would be remiss if he did not acknowledge that differences in engineering practice, nomenclature, engineering standards, and training may have an effect on the ability to fully utilize all that is presented in this work. One example is the difficulty in understanding the descriptive terms for some flow system components. However, the graphical presentations of much of the material in this book will help the reader overcome most such difficulties.

In a work of this nature, it is very probable that errors of translation or data reporting have occurred. The editor and the publisher would be most grateful to the readers and users of this handbook for information on such items.

Erwin Fried

PREFACE TO THE ENGLISH EDITION

The present edition of the *Handbook of Hydraulic Resistance*, translated into English from the second Russian edition of the book (Mashinostroenie Publishing House, Moscow, 1975), differs markedly from its first edition (Gosenergoizdat, Moscow, 1960), translated into English in 1966 (*Handbook of Hydraulic Resistance*, Israel Program for Scientific Translations, Jerusalem, 1966) and into French in 1969 (*Memento des pertes de charge*, Eyrolles Editeur, Paris, 1969).

The second edition of the book has been substantially augmented by incorporating a considerable body of totally new data on hydraulic resistances obtained as a result of research work in recent years. By and large, as compared with the first, the second edition contains more than 40% new and revised data.

When this edition was prepared, all of the misprints and errors discovered in the Russian edition were corrected, and some more precise definitions and changes were made.

The book is based on the utilization, systematization, and classification of the results of a large number of studies carried out and published at different times in different countries. A large portion of the data was obtained by the author as a result of investigations carried out by him.

It is quite clear that the methods of investigation, the models used, and, consequently, the accuracy of the results obtained and reported by various authors differ markedly in many cases. Such differences in the results could also be due to the fact that the majority of local hydraulic resistance coefficients are greatly influenced not only by the regime of flow but also by the prehistory of the flow, that is, conditions of supply to the section considered, nature of the velocity profiles, and degree of turbulence at the inlet and in some cases by the subsequent history of the flow as well; that is, flow removal from the test section.

Many complex elements of pipelines exhibit great instability of flow due to periodic fluid separation from the walls, periodic changes of place and magnitude of separation, and eddy formation resulting in large oscillations of hydraulic resistance.

The author was faced with an enormously difficult task: to discover and, where necessary, discard experimental results of questionable validity in that diverse body

of data compiled on the hydraulic resistance coefficients; to clear up cases where large variations in the resistance coefficients of the sections are regular and correspond to the essence of the hydrodynamic pattern and those cases where they are due to the experimental uncertainty; and to select the most reliable data and find a successful format for presenting the material so that it is accessible and understandable to nonspecialists in aerodynamics and hydraulics. It had to be taken into account that, in practice, the configurations of sections of various impedances in pipelines, their geometric parameters, the conditions of entry and exit of the flow, and its regimes are so diverse that it is not always possible to find the required reported experimental data necessary to calculate the hydraulic resistances. The author has therefore incorporated in this handbook not only results that have been thoroughly verified in laboratories but also those provided by less rigorous experimental investigations and those predicted or obtained by approximate calculations based on separate experimental studies. In some cases, tentative data are shown and are so noted in the text. We think this approach is justified because the facilities used under industrial conditions, and consequently the conditions of flow passages in them, can greatly differ among themselves and differ from laboratory conditions, under which the majority of hydraulic resistance coefficients have been obtained. In many complex elements of pipelines, these coefficients, as shown above, cannot be constant due to the nature of the phenomena occurring in them; thus, they can vary over wide ranges.

The author hopes that the present edition will not only be useful for the further development of engineering science and technology in the English-speaking countries but will also aid in fostering friendly relations between the peoples of these countries and the Soviet people.

I. E. Idelchik

PREFACE TO THE 2nd RUSSIAN EDITION

There does not seem to be any branch of engineering that is not somehow involved with the necessity for moving liquids or gases through pipes, channels, or various types of apparatus. The degrees of complexity of hydraulic or fluid systems can therefore be widely different.

In some cases these are systems that for the most part are composed of very long straight pipes, such as oil pipelines, gas lines, water conduits, steam pipes, and air ducts of ventilation plants in industrial use. In other cases they are pipelines that are relatively short but that abound in fittings and branches, various impedances in the form of valves, orifices, and adjusting devices, grids, tees, etc. as found in air ducts of complex ventilation systems; gas flues of metallurgical works, chemical and other factories, boiler furnaces, nuclear reactors, and dryers; fuel and oil pipes and various manifolds of aircraft and rockets.

Most frequently the system through which a liquid or gas moves constitutes a large single unit (e.g., boilers, furnaces, heat exchangers, engines, air- and gas-cleaning equipment, and chemical, petrochemical, metallurgical, food, textile, and other manufacturing equipment).

In all cases, it is essential that the fluid resistance of these systems be properly calculated. Furthermore, the adequate design of sophisticated present-day installations consisting of complex-shaped parts of hydraulic and fluid lines is impossible without insight into the principal physicomechanical processes occurring in them and consideration of suggestions for the improvement of flow conditions and reduction in the local fluid resistance of these elements. The requisite information is given in this handbook.

A great body of new data on resistance coefficients accumulated since the first edition of this book has required an extensive revision of the text to account for the results of recent studies. But since it was not practically possible to incorporate all the newly published data on such flow resistance, this gap has been supplemented by an extensive listing of pertinent references.

The handbook consists of 12 chapters. Each chapter, except for the first one, contains data on a definite group of fittings or other parts of pipelines and fluid net-

work elements having similar conditions of liquid or gas motion through them. The first chapter is a synopsis of general information on hydraulics of pressure systems and aerodynamics needed for design calculation of the elements of air-gas pipelines and hydraulic networks. All of the subsequent chapters contain:

- An explanatory part giving, as a rule, a brief account of the subject matter of the section, an outline of the main physicochemical processes occurring in complex elements of pipelines, additional clarifying remarks and practical recommendations for the calculation and choice of separate network elements, and recommendations on ways to reduce their hydraulic resistance.
- A computational part giving the coefficients or, in some instances, the absolute values of the fluid resistances of straight sections and of a wide range of complex-shaped parts of pipelines, fittings, various impedances, and other elements of the fluid networks. In each chapter the data are represented by special diagrams that contain a schematic of the element considered, calculation formulas, graphs, and tables of the numerical values of the resistance coefficients.

It is essential for the present-day design analysis of hydraulic (fluid) networks with the use of electronic computers that the resistance coefficients be given in the form of convenient design tormulas. Moreover, it is often practical to represent in a concise form the functional dependence of the resistance coefficient on the main governing parameters.

Graphical representation of this dependence is advantageous because, on the one hand, it furnishes a rather vivid illustration of the nature of this dependence and, on the other hand, it makes it possible to obtain intermediate values of the resistance coefficients not listed in tables. The resistance coefficients given in tabular form are the principal values, which can be conveniently used in calculations.

The measurement units are given in the SI system. In selected cases, for convenience of usage, some quantities are also given in the meter-kilogram (force)-second system.

I. E. Idelchik

PREFACE TO THE 3rd EDITION

The 3rd edition of this Handbook is augmented with the most important results of investigations carried out in recent years. Some of the sections in the book have been refined and changed.

The Handbook has been composed on the basis of processing, systematization, and classification of the results of a great number of investigations published at different times. The essential part of the book is the outcome of investigations carried out by the author.

The results of investigations (the accuracy with which the models and fittings of pipelines were created, the accuracy of measurements, etc.) carried out by different specialists could differ among themselves. This might also be possible because the majority of local fluid resistances experience the influence of not only the mode of flow, but also the flow "prehistory" (the conditions of its supply to the given section, the velocity profile, and the degree of flow agitation at the inlet, etc.) and in some cases also the subsequent "history" of a flow (flow discharge from the section). All these conditions could be different in the studies undertaken by various authors.

In many complex elements of pipeline systems, a great instability of flow is observed due to the periodicity of flow separation from the walls, periodic variation of the place, and magnitude of the zone of flow separation and eddy formation. This results in different values of hydraulic resistances.

The author was faced with a difficult problem: when selecting most variegated information on hydraulic resistances, it was necessary to reveal and discard the questionable results of experiments to get a deeper understanding in which cases the great difference between the resistance coefficients of sections is regular, corresponding to the essence of the phenomena that occur during the motion of streams through them, and in which they are not regular; to select the most reliable data and find the most pertinent form of the presentation of information to make it accessible and understandable for engineers and technicians.

The configuration of sections and obstacles in pipeline systems, their geometric parameters, conditions of supply and removal, and of the modes of flow are so diverse that one often fails to find out from literature the necessary experimental data

for the calculation of their hydraulic resistances. Therefore, the author incorporated not only the data thoroughly verified by laboratory investigations, but also those which were obtained theoretically or by approximate calculations based on separate experimental studies, and in some cases tentative data (specified in the text). This is permissible because the accuracy of fabrication and mounting of the systems of pipes and equipments in industrial conditions and, consequently, the conditions for the flow of streams may greatly differ between separate installations and differ from laboratory conditions at which the majority of fluid resistance coefficients were obtained, and also because of the fact that for many complex elements these coefficients cannot be constant quantities.

The present edition of this Handbook should assist in increasing the quality and efficiency of the design and usage of industrial power engineering and other constructions and also of the devices and apparatus through which liquids and gases move.

PREFACE TO THE 4th ENGLISH EDITION

Professor I. E. Idelchik's *Handbook of Hydraulic Resistance* has become widely known: its 2nd and 3rd editions were translated into the English, French, Chinese, and Czech languages. Each subsequent edition was enriched with new information and data, as well as with new entries to the bibliography. The present, 4th, English Edition of the Handbook, like the previous one, was prepared after the author's death, and appears only in its English version.

We shall list here the most essential additions and changes that we thought worthwhile to make in some of the chapters of this book. In particular, Chapter 2 dealing with stabilized steady-state flow in channels and tubes was supplemented with the following experimental results: unsteady flows with a sharp change in the turbulent velocity as well as on a smooth change in time and its resulting effect on the hydraulic resistance. This chapter has a new section on the stabilized turbulent flow in plane and annular channels when the flow is induced by longitudinal motion of one of the walls (Couette flow) or when the flow is driven by longitudinal motion of one of the walls and longitudinal pressure gradient (Couette–Poiseuille flow). The computed data and their agreement with experimental results are given. Such flows are typical of the systems of container piping pneumatic- and hydrotransport in which the containers move under the action of forced air or water flow (passive containers) or where a train moves in a tunnel due to the presence of draft (the so-called active containers).

The results of computational and experimental studies of the characteristics of a Couette forced turbulent flow in plane and annular channels (concentric and accentric) in the presence and absence of surface roughness are given. Examples of computed dependences needed to determine the velocity of motion of cylindrical passive and self-propelled containers in a tubing for given longitudinal pressure gradients, Reynolds numbers, length and their relative diameters and eccentricity are also furnished. Together with the equation of the balance of forces acting on a container of given length, these dependences can be used to determine the parameters of the container motion.

A description is given of the hydrodynamic paradox when the velocity of motion of a sufficiently long enough passive cylindrical container of neutral buoyancy in a turbulent water flow may exceed the maximum water flow velocity along the tube axis.

Chapter 3 presents the result of experimental studies of an oblique flow past a frontal air intake with a system of flow controls providing a separationless flow in a channel up to inflow angles of 90°. The problem will be of interest to ground-level transport facilities and ships with frontal air intakes.

Chapter 4 describes the technique used to reduce the total pressure losses in channels with an abrupt expansion by breaking down vortices with the aid of transverse partitions as well as by blowing a jet from a slit to create the so-called jet diffuser. In the latter case, the loss coefficient with allowance for pressure losses on injection is decreased 1.5 times. This effect is enhanced by using the Coanda effect in the course of creating a jet diffuser (the phenomenon of adherence of a plane jet to a convex plane surface) when a jet is blown from a curvilinear slit; the loss coefficient is decreased here by a factor of 2–2.5.

Chapter 5 devoted to diffuser flows has been thoroughly revised in the present edition. This chapter presents the experimental results of plane and conical diffusers with different area ratios and divergence angles depending on Reynolds and Mach numbers at subsonic velocities and at different parameters of the initial flow nonuniformity and surface roughness. Examples of changes in the geometry of diffusers on replacing rectilinear by curvilinear walls to increase the efficiency of diffusers are given. The means of improving the characteristics of diffusers by installing different kinds of partitions and screens, finning the diffuser surface or installing generators of longitudinal vortices at the inlet to delay flow separation are also described.

In contrast to the previous editions of the Handbook, the methods of calculating a turbulent flow in diffuser channels and determining the total pressure losses on the basis of the boundary-layer approximation are briefly reviewed here. Moreover, the use of these methods in solving direct and inverse problems in calculating the diffuser channels is considered. In solving the direct problem, the coefficient of total pressure loss in a diffuser of a given geometry at fixed Reynolds and Mach numbers, initial flow nonuniformity at the inlet to the diffuser, surface roughness up to the section where flow separation occurs are calculated.

The solution of an inverse problem for the starting length of diffuser flow is aimed at determining the geometrical parameters of the diffuser at a fixed Reynolds number from the *a priori* specified velocity distribution along the channel axis or of the surface friction coefficient on its walls. Thus, for example, when specifying a virtually zero surface friction on the walls of a diffuser, the so-called preseparation flow develops in the latter. It appears that such diffusers possess a number of extreme properties. Calculations and experiments have shown that in such diffusers, at a given length, a marked decrease in the total pressure loss is ensured or, at a given area ratio, a substantial decrease in the diffuser length is possible.

Additional information is also given on aerodynamic methods of controlling the flow characteristics in diffusers with the aid of slit suction or tangential injection — both enabling the increase in the efficiency of a diffuser with allowance for energy losses in such cases.

Chapter 6 presents new data on the hydraulic resistance of pipe bends in the presence of cavitation in a stream of water and gas–liquid mixtures.

Chapter 8 contains results of calculations and describes experiments aimed at creating the initial flow nonuniformity in a channel with the aid of screens of variable resistance across the flow and of an array of cylinders. It also suggests a technique of creating a high-turbulent flow with a section-uniform turbulence intensity with the aid of a two-row array of cylinders with opposite motion of the rows.

Finally, Chapter 12 contains new data on heat transfer and hydraulic resistance in an in-line bank of tubes. It is shown that according to experimental results and of numerical simulation, the finning of their surface as well as indentation of staggered dimples on a smooth surface lead to a substantial enhancement of heat transfer that overtakes an increase in the hydraulic resistance. The chapter also contains data on the enhancement of heat transfer in round and annular tubes with the aid of different kinds of swirlers with continuous twisting along the flow as well as on the hydraulic losses and heat transfer of rotating channels (rotation of a tube around its own axis or around the axis which is perpendicular to that of the tube). These results are of interest in their application to heat transfer problems.

By having prepared this edition for publication we are paying tribute to the memory of Professor I. E. Idelchik — the author of this Handbook with whom we had the pleasure of first working in the same laboratory and then remaining all the time in close contact when he took up work at another institute. One of us reviewed the 2nd Russian edition of this book (1975) as well as his monographs "Aerohydrodynamics of Engineering Apparatus" and "Some of the Interesting Effects and Paradoxes in Aerohydrodynamics and Hydraulics" (1982).

A. S. Ginevskiy and A. V. Kolesnikov
Central Aero-Hydrodynamics
Institute (TsAGI), Moscow

NOMENCLATURE

Symbol	Name of quantity	Abridged notation in SI units
a_1	speed of sound	m/s
a_{cr}	critical speed of sound	m/s
a^*	speed of sound in frozen flow	m/s
a, b	sides of a rectangle	m
c_p and c_v	specific heats of gases at constant pressure and constant volume, respectively	J/kg ^oC
c_x	coefficient of drag	–
D, d	cross-section diameters	m
$D_h = 4F/\Pi$; $d_h = 4f/\Pi$	hydraulic or equivalent diameter ($4 \times$ hydraulic radius)	m
F, f	cross-sectional areas	m^2
$\bar{f} = F_{or}/F_{gr}$	area ratio of a grid, orifice, perforated plate, etc.	–
G	mass flow rate of liquid (gas)	kg/s
g	gravitational acceleration	m/s^2
h	height	m
$k = c_p/c_v$	specific heat ratio	–
l	length of flow segment, depth of channel, or thickness of orifice	m
$\mathrm{Ma} = w/a_1$	Mach number	–
$M = 1/F \int_F (w/w_0)^2 dF$	coefficient of momentum (Boussinesq coefficient)	–
m_0	wetting intensity	m^3/m^3
m	exponent	–
$N = 1/F \int_F (w/w_0)^3 dF$	coefficient of kinematic energy (Coriolis coefficient)	–
N_m	power	W
n	polytropic exponent	–
n_{ar}	area ratio (degree of enlargement or reduction of cross section); polytropic exponent; number of elements	–

Symbol	Name of quantity	Abridged notation in SI units
n_{el}	number of elements	–
p_*	static pressure	Pa
p_f	total pressure of flow stagnation pressure	Pa
p_{ex}	excess pressure	Pa
Δp	overall pressure difference	Pa
P_{dr}	drag force	N
Q	volumetric flow rate	m^3/s
R	gas constant	J/kg K
R_h	hydraulic radius ($\frac{1}{4} D_h$)	m
R_0, r	radii of cross sections of a circular pipe or curved pipe length	m
$\mathrm{Re} = wD_h/\nu$	Reynolds number	–
S, s	spacing (distance between rods in a bundle of pipes, between grid holes, etc.)	m
S_{fr}	length of a free jet	m
S_0	surface area	m^2
S_m	frontal area of a body in a flow	m^2
$T(t)$	thermodynamic temperature	K (^oC)
T^*	thermodynamic flow stagnation temperature	K
v_{sp}	specific volume	m^3/kg; m/s
v	side discharge (inflow) velocity	m/s
w	stream velocity	m/s
w'	longitudinally fluctuating stream velocity	m/s
z	dust content	g/m^3
z_d	dust capacity	kg/m^2
α	central angle of divergence or convergence; angle of a wye or tee branching; angle of stream incidence	deg
δ	angle of turning (of a branch, elbow); angle of valve opening	
δ_t	thickness of a wall, boundary layer, or wall layer	m
δ_j	height of joint	m
Δ	equivalent uniform roughness of walls	m
Δ_0	mean height of wall roughness protuberances (absolute roughness)	
$\bar{\Delta}_0 = \Delta_0/D_h$; $\bar{\Delta} = \Delta/D_h$	relative roughness of walls	–
$\varepsilon = F_{con}/F_0$	coefficient of jet contraction	–
ε'	porosity (void fraction)	–
$\varepsilon_t = \sqrt{\overline{w'^2}}/w_0$	degree of turbulence	–
$\zeta \equiv \Delta p/(\rho w^2/2)$	coefficient of fluid resistance (pressure loss coefficient)	–

Symbol	Name of quantity	Abridged notation in SI units
ζ_{loc}	coefficient of local fluid resistance	–
ζ_{fr}	coefficient of friction resistance of the segment of length l	
η	dynamic viscosity	Pa s
η_{Π}	cleaning coefficient	–
$\lambda = \zeta_{fr}/(l/D_h)$	friction coefficient [friction resistance of the segment of relative unit length ($l/D_h = 1$)]	–
$\lambda_c = w/a_{cr}$	relative (reduced) stream velocity	–
μ	discharge coefficient	–
μ_{con}	mass concentration of suspended particles in flow	–
ν	kinematic viscosity	m^2/s
ρ	density of liquid (gas)	kg/m^3
ρ^*	density of frozen gas flow	kg/m^3
ρ_{cr}	density of gas at critical velocity	kg/m^3
Π	cross-sectional (wetted) perimeter	m
φ	velocity coefficient	–

SUBSCRIPTS

Subscripts listed for the quantities F, f, D, d, Π, a, b, w, ρ, Q, and p refer to the following cross sections or pipe segments:

0	governing cross section or minimum area
1	larger cross section in the case of expansion or contraction of the flow segment
2	larger cross section after equalization of the stream velocity
k	intermediate cross section of curved channel (elbow, branch) or the working chamber of the apparatus
con	contracted jet section at the discharge from an orifice (nozzle)
or	orifice or a single hole in the perforated plate or screen
gr	front of the perforated plate, screen, orifice
br, st, ch	side branch, straight passage, and common channel of a wye or tee, respectively
out	outlet
∞	velocity at infinity

Subscripts 0, 1, 2, k, and d at l refer, respectively, to the inlet, straight outlet, intermediate (for a curved channel), and diffuser pipe lenghths.

Subscripts at Δp and ζ refer to the following forms of the fluid resistances:

loc	local
fr	friction

ov	overall
d	total resistance of a diffuser in the network
out	total resistance of a diffuser or a branch at the outlet from the network
int	internal resistance of a diffuser
exp	resistance to flow expansion in a diffuser
sh	shock resistance at sudden enlargement of the cross section
br and st	resistance of a branch and straight passage of a wye or tee (for the resistance coefficients reduced to the velocity in respective branch pipes)
r.br., r.st.	resistance coefficients of the side branch and of the straight passage of a wye or tee reduced to the velocity in a common channel of a wye or tee

USEFUL CONVERSIONS OF UNITS

Physical quantity	Given in ⟶ Gives ⟵	Multiplied by ⟶ Divided by ⟵	Gives Given in	Approximate or useful relationship
Length	ft	0.3048	m	$3\frac{1}{4}$ ft ≈ 1 m
	in	25.4 (exact)	mm	1 in ≈ 25 mm
	mil	0.0254	mm	
	yard	0.9144	m	
	mile (mi)	1609.3	m	1 mi ≈ 1.6 km
	km	0.621388	mi	
Area	ft^2	0.092903	m^2	100 ft^2 ≈ 9 m^2
	in^2	645.16	mm^2	1 in^2 ≈ 650 mm^2
	acre	4047.0	m^2	
Volume	ft^3	0.028317	m^3	35 ft^3 ≈ 1 m^3
	U.S. gal	0.003785	m^3	260 gal ≈ 1 m^3
	U.S. gal	3.785	liter (L)	1 gal ≈ $3\frac{3}{4}$ L
	L (liter)	0.2642	U.S. gal	1 L ≈ 0.26 gal
	Brit. gal	0.004546	m^3	
	U.S. gal	0.13368	ft^3	
	barrel (U.S. pet.)	0.15898	m^3	
	barrel (U.S. pet.)	42	U.S. gal	
Velocity	ft/s[a]	0.3048	m/s	10 ft/s ≈ 3 m/s
	m/s	3.2808	ft/s	
	ft/min	0.00508	m/s	100 ft/min ≈ 0.5 m/s
	mi/h	1.6093	km/h	30 mi/h ≈ 48 km/h
	km/h	0.6214	mi/h	50 km/h ≈ 31 mi/h
	knots	1.852	km/h	
Mass	lb_m	0.45359	kg	1 lb_m ≈ .45 kg
	kg	2.2046	lb_m	1 kg ≈ 2.2 lb_m
	metric ton	2204.6	lb_m	metric ton = 10^3 kg
	ton (2000 lb_m)	907.18	kg	

Reprinted from International System of Units (SI), J. Taborek, in Heat Exchanger Design Handbook, pp. xxvii–xxix, Hemisphere, Washington, D.C., 1984.

Physical quantity	Given in ⟶ Gives ⟵	Multiplied by ⟶ Divided by ⟵	Gives Given in	Approximate or useful relationship
Force	lb_f	4.44822	N = kg m/s^2	
	lb_f	0.45359	kg_f	1 N ≈ 0.1 kg_f
	kg_f	2.2046	lb_f	≈ 0.22 lb_f
	kg_f	9.80665	N	
	dyne	0.00001 (exact)	N	
Amount of substance	lb_m-mol	453.6	kmol	
	g-mol	1.000	mol	
	kg-mol	1.000	kmol	
	mol	1000	kmol	
Mass flow rate	lb_m/h	0.0001260	kg/s	10^3 lb/h ≈ .13kg/s
	kg/s	7936.51	lb_m/h	
	lb_m/s	0.4536	kg/s	
	lb_m/min	0.00756	kg/s	
Volume flow rate	U.S. gal/min	6.309×10^{-5}	m^3/s	
	U.S. bbl/day	0.15899	m^3/day	
	U.S. bbl/day	1.84×10^{-6}	m^3/s	
	ft^3/s	0.02832	m^3/s	
	ft^3/min	0.000472	m^3/s	
Mass velocity (mass flux)	lb_m/h ft^2	1.356×10^{-3}	kg/s m^2	
	kg/s m^2	737.5	lb_m/h ft^2	
Energy (work)	Btu[b]	1055.056	J = N m = W s	1 Btu ≈ 1000 J
(heat)	Btu	0.2520	kcal	1 kcal ≈ 4 Btu
	Btu	778.28	ft lb_f	
	kcal	4186.8	J	1 kcal ≈ 4000 J
	ft lb_f	1.3558	J	
	W h	3600	J	
Power	Btu/h	0.2931	W = J/s	10^6 Btu/h ≈ 300 kW
	W	3.4118	Btu/h	
	kcal/h	1.163	W	
	ft lb_f/s	1.3558	W	1000 kW ≈ 3.5×10^6 Btu/h
	hp (metric)	735.5	W	
	Btu/h	0.2520	kcal/h	
	tons refrig.	3516.9	W	
Heat flux	Btu/h ft^2 ^{o}F	3.1546	W/m^2	1000 Btu/h ft^2 ≈ 3.2 kW/m^2
	W/m^2	0.317	Btu/h ft^2	
	kcal/cm^2 s ^{o}C	41.868	W/m^2	
Heat transfer coefficient	Btu/h ft^2 ^{o}F	5.6784	W/m^2 K	1000 Btu/h ft^2 ^{o}F ≈ 5600 W/m^2 K
	W/m^2 K	0.1761	Btu/h ft^2 ^{o}F	
	kcal/cm^2 s ^{o}C	41.868	W/m^2 K	
Heat transfer resistance	(Btu/h ft^2 ^{o}F)$^{-1}$	0.1761	(W/m^2 K)$^{-1}$	0.001 (Btu/h ft^2 ^{o}F)$^{-1}$ ≈ 0.00018 (W/m^2 K)$^{-1}$
	(W/m^2 K)$^{-1}$	0.6784	(Btu/h ft^2 ^{o}F)$^{-1}$	

Physical quantity	Given in ⟶ / Gives ⟵	Multiplied by ⟶ / Divided by ⟵	Gives / Given in	Approximate or useful relationship
Pressure	lb_f/in^2 (psi)	6.8948	kN/m^2 = kPa	1 psi ≈ 7 kPa
	kPa	0.1450	psi	14.5 psi ≈ 100 kPa
	bar	100	kPa	
	lb_f/ft^2	0.0479	kPa	
	mm Hg (torr)	0.1333	kPa	1000 kPa = 1 MPa ≈
	in Hg	3.3866	kPa	150 psi
	mm H_2O	9.8067	Pa	
	in H_2O	249.09	Pa	1 in H_2O ≈ .25 kPa
	at (kg_f/cm^2)	98.0665	kPa	
	atm (normal)	101.325	kPa	atm = 760 mm Hg
Mass flux	lb_m/ft^2 s	4.8824	kg/m^2 s	
	lb_m/ft^2 h	0.001356	kg/m^2 s	
Physical and Transport Properties				
Thermal conductivity	Btu/ft h°F	1.7308	W/m K	steel ≈ 50 W/m K
	W/m K	0.5778	Btu/ft h°F	water (20°C) ≈ 0.6 W/m K
	kcal/m h°C	1.163	W/m K	air (STP) ≈ 24 mW/m K
Density	lb_m/ft^3	16.0185	kg/m^3	62.4 lb_m/ft^3 ≈ 1000 kg/m^3
	kg/m^3	0.06243	lb_m/ft^3	
	lb_m/U.S. gal	119.7	kg/m^3	
Specific heat capacity	Btu/lb_m °F	4186.8	J/kg K	1 Btu/lb_m °F ≈ 4.2
	kcal/kg °C	4186.8	J/kg K	kJ/kg K
Enthalpy	Btu/lb_m	2326	J/kg	
	kcal/kg_m	4186.8	J/kg	
Dynamic (absolute) viscosity	centipoise (cP)	0.001	kg/m s	kg/m s = N s/m^2 = Pa s
	poise (P)	0.1	Pa s	
	cP	1.000	mPa s	
	cP	1000	μPa s	water (1000°C), 0.31 cP
	lb_m/ft h	0.0004134	Pa s	
	lb_m/ft h	0.4134	cP	
	cP	2.4189	lb_m/ft h	air (100°C), 0.021 cP
	lb_m/ft s	1.4482	Pa s	
Kinematic viscosity	stoke (St), cm^2 s	0.0001	m^2/s	
	centistoke (cSt)	10^{-6}	m^2/s	
	ft^2/s	0.092903	m^2/s	
Diffusivity	ft^2/s	0.092903	m^2/s	
Thermal diffusiivity	m^2/h	0.0002778	m^2/s	
	ft^2/s	0.092903	m^2/s	
	ft^2/h	25.81×10^{-6}	m^2/s	
Surface tension	dyne/cm	0.001	N/m	
	dyne/cm	$6.852\ 10^{-5}$	lb_f/ft	
	lb_f/ft	14.954	N/m	

Temperature relations:	$^{o}C = \frac{5}{9}[^{o}F - 32]$	$^{o}C = (^{o}F + 40)\frac{5}{9} - 40$	$\Delta T(^{o}C) = \frac{9}{5}\Delta T(^{o}F)$	$mK = {}^{o}C + 273.15$
	$^{o}F = \frac{9}{5}(^{o}C) + 32$	$^{o}F = (^{o}C + 40)\frac{9}{5} - 40$	$\Delta T(^{o}F) = \frac{5}{9}\Delta t(^{o}C)$	$R = {}^{o}F + 459.67$

Miscellaneous:	Acceleration of gravity (standard):	$g = 9.80665\ m/s^2$
	Gas constant:	$R = 8314.3\ m\ N/K\ kmol$
	Stefan–Boltzmann constant:	$5.6697 \times 10^{-8}\ W/m^2\ K^4$
		$1.714 \times 10^{-9}\ Btu/ft^2\ h\ R^4$

[a]Even though the abbreviations s and h were introduced only with the SI, they are used here throughout for consistency.

[b]The calorie and Btu are based on the International Standard Table values. The thermochemical calorie equals 4.184 J (exact) and is used in some older texts.

READER'S GUIDE AND INTRODUCTION

Prepared by **William Begell, Fellow, A.S.M.E.**

Resistance to flow is an important engineering subject; it is applicable to every branch of engineering where flows of liquids and gases take place. A few areas where the knowledge of the resistance to flow is a normal requirement in the design and operation of fluid loops, circuits, and systems are air conditioning and ventilation, aeronautical engineering, biochemical and pharmaceutical engineering, chemical engineering, civil engineering, mechanical engineering, nuclear engineering, petroleum engineering, power engineering, as well as all hydraulic, agricultural, and space engineering plants, systems, and equipment. The importance of exact and true values of flow resistance is, primarily, a question of determining the pumping — or power — requirements for any apparatus or, eventually, for the entire plant involved in the motion of fluid. Needless to say, energy requirements are equivalent to the size of the funding capital, or operational, costs and are therefore of prime importance to the practice of engineering.

Professor Idelchik's *Handbook of Hydraulic Resistance* has gained worldwide recognition and reputation among engineers through usage over the last 35 years when the first edition was published in Moscow. The 3rd, posthumous, edition was prepared and submitted to the publisher several months before the death of the author in 1990. It was published in the English language by Begell House in 1996.

In the present, 4th, edition all the errors and misprints that were found in the Russian and English versions of the previous editions have been corrected, and new sections have been written for almost all the chapters of the Handbook (see Preface to the 4th English Edition).

The use of this Handbook can easily be likened to the use of an illustrated catalog. Various pieces of equipment and flow components, including fittings and even entire systems, have been assembled in separate chapters and catalogued, using illustrations, graphs, and tabular data. It is essential to note that the users, both old and new, should acquaint themselves with Chapter 1 before succumbing to the appeal of simply looking up specific values of resistance coefficients, drag values, friction factors, or other data directly in the appropriate chapters. The reading and understanding of Chapter 1 will — in the final tally — save a tremendous amount of time in the subsequent use of this Handbook.

CHAPTER 1
GENERAL INFORMATION AND ELEMENTS OF AERODYNAMICS AND HYDRAULICS OF PRESSURE SYSTEMS

At the outset, it should be noted that most of the values listed in the Handbook are **dimensionless**; however, the text is written using SI Units.

In the simplest of terms, flowing systems are set in motion by a difference in pressure, and the resistance to flow is offered by friction and other mechanical flow-hindering aspects of the materials of construction of the conduits and equipment. The dependencies of the hydraulic resistance on the dimensions, configuration, shape, surface roughness, geometry, and other features and properties of the material of construction, the relationships between the hydraulic resistance and properties of the flowing medium such as density and viscosity (in turn, these depend on temperature), and the correlation between the fluid-flow regimes, turbulent, laminar, velocity, and boundary layer considerations are all lucidly explained in this chapter.

The salient features and descriptions in Chapter 1 are:

- Pressure Drop
- Velocity Distribution
- Resistance Coefficient
- Tables of Hydraulic Resistance in Systems
- Tables of Units of Physical Quantities
- Tables of Properties of
  - Liquids and Gases
  - Density and Viscosity for Pure and Multicomponent F1uids
- Fluid Flow Regimes, Boundary Layers
- Equilibria of Liquids and Gases
- Equations of Fluid Motion
- Buoyancy (Net Driving Head)
- Hydraulic Resistance of Networks
- Distribution of Static Pressure
- Flows through Orifices Discharge Coefficients
- Pressurizers (Superchargers)
- Methods of Calculating Fluid Resistance of Systems
- Forced Ventilation
- Scrubbing of Gases
- Wind Tunnel

Of worthy note and special reading recommendation are the sections in Chapter 1 that offer step-by-step examples of calculation of flow resistances.

Each of the subsequent chapters in this Handbook is divided into two parts: EXPLANATIONS AND PRACTICAL RECOMMENDATIONS and DIAGRAMS OF FRICTION OR RESISTANCE COEFFICIENTS. Again, it is strongly suggested that the reader, who should by now be generally well versed in the concepts and proce-

dures in Chapter 1, peruse the first part of the chapter that is being consulted, before getting into the second part with its detailed catalog of tables, graphs, equations, and illustrations.

The first part of each chapter — from Chapter 2 through Chapter 12 — will provide the readers with the engineering and mathematical apparatus and background of the given problem, configuration, flow regime, fluid properties and fluid velocity, materials of construction, roughness, and other specifics within the chapter title topic.

The Handbook has well over 1000 illustrations and almost triple the number of tables. The illustrations in the second part of each chapter, or the Diagram Sections, are intended as the catalog of various pieces of equipment, configurations, shapes, spacings, forms, and sequences. After a few perusals, the readers will easily become acquainted with the Handbook and will find an efficient way to go through the presented material.

The following Guide to Chapters 2 through 12 offers a non-alphabetized and not necessarily sequential listing of the topics covered. This guide should be consulted when seeking a specific item, or configuration, for which resistance information is needed.

CHAPTER 2
RESISTANCE TO FLOW IN STRAIGHT TUBES AND CONDUITS: FRICTION COEFFICIENTS AND ROUGHNESS

- Exponents in Equations
- Roughness of Materials
  - Metals
  - Cement
  - Glass and Plastics
- Growth of Asperities with Time (Fouling)
- Flow Regimes
- Unsteady Motion
- Acceleration, Deceleration
- Tube Bundles
  - Arrays
- Materials
- Joints
  - Welded
  - Recessed
- Channel Shapes
  - Circular
  - Triangular
  - Square
  - Starlike
  - Annular (Concentric and Eccentric)

- Flexible Tubes
  - Rubber Hoses
  - Plywood Channels
  - Plastic Hoses
- Channels with a Moving Wall
- Couette–Poiseuille Flow
- Container Pipeline Transport

CHAPTER 3

RESISTANCE TO FLOW AT THE ENTRANCE IN TUBES AND CONDUITS: RESISTANCE COEFFICIENTS OF INLET SECTIONS

In using this chapter, the reader should be aware of the fact that the entry into a vessel or channel is usually an exit from another vessel or channel. Thus, other chapters should be consulted to determine whether other resistance coefficients apply. For example, the entry into a vessel may be an elbow with an orifice or a screen. Data for these may also be found in other appropriate chapters.

- Entrance Losses
- Sharp Edges
- Wall Effects
- Conical Sections
- Angular Entries
- Mountings
- Sudden Contractions
- Side Orifices
- Annular Inlets
- Circular Orifices
- Square Orifices
- Inlets, Flush Mounted
  - Bellmouth
  - Baffled
  - Unbaffled
  - Bevelled Edge
- Prevention of Separation
- Perforated Plates
- Shafts, Intake
  - With Louvers
  - Without Louvers
- Fans
- Turbines

CHAPTER 4

RESISTANCE TO FLOW THROUGH ORIFICES WITH SUDDEN CHANGES IN VELOCITY AND FLOW AREA: RESISTANCE COEFFICIENTS OF SECTIONS WITH SUDDEN EXPANSION, SUDDEN CONTRACTION, ORIFICES, DIAPHRAGMS, AND APERTURES

- Perforated Plates
- Diffusers
  - Straight
  - Angular
- Ejectors
- Mixing Chambers
- Channels
  - Stepwise
  - Thick-edged
  - Sharp-edged
- Effect of Location
- Shapes
- Configurations
- Regimes
  - Turbulent
  - Laminar
  - Subsonic
- Velocity Distribution
- Resistance Reduction
- Transverse Finning
- Jet Diffusers
- Elbows
  - With Guide Vanes
- Tubes, Circular
- Channels, Plane
- Jets
- Flaps, Hinged
- Exhausts
  - Gratings, Elliptical

CHAPTER 5

RESISTANCE TO FLOW WITH A SMOOTH CHANGE IN VELOCITY: RESISTANCE COEFFICIENTS OF DIFFUSERS AND CONVERGING AND OTHER TRANSITION SECTIONS

- Diffusers
- Resistance Reduction
  - Generators of Vortices
  - Shape of Walls

- Preseparation Diffusers
- Transverse Finning
- Suction, Blowing

- Inlet Nozzles, Smooth
- Elbows
- Throttling Devices
- Fittings
  - With Grids
  - Without Grids
  - Short
  - Long
  - Curved Axis
- Guide Vanes
  - Annular
- Baffles
- Inserts
- Screens
- Perforated Plates
- Pumps
- Fans
- Turbines
- Nozzles
  - Converging
- Transition Sections
- Branching Pipes

CHAPTER 6

RESISTANCE TO FLOW WITH CHANGES OF THE STREAM DIRECTION: RESISTANCE COEFFICIENTS OF CURVED SEGMENTS — ELBOWS, BENDS, ETC.

- Bypasses
- Tubes, Helical
- Flow Regimes
- Cavitation
- Gas–Liquid Mixtures
- Roughness
- Velocity Distribution
- Welded Bends
- Joints, Threaded
- Goosenecks
- Elbows
  - 180°
  - U-Shaped
  - Sharp Corners
- Elbows and Turns
  - In Space

Round and Square
With and Without Vanes
Steps

- Bends
  Circular
  Z-Shaped
  Square
  Downstream of Pumps
  Multi-element
  90°
  S-Shaped
  Same and Different Planes
  Cylindrical
- Guide Vanes
- Turns, Annular
- Pump Outlets
- Pulverized Materials
- Dust
- Bypasses, at Different Angles
- Bends, Wire
  Tape Covered
- Vanes, Profiled
  Different Spacings
  Different Corners

CHAPTER 7

RESISTANCE IN THE CASES OF MERGING OF FLOW STREAMS AND DIVISION INTO FLOW STREAMS: RESISTANCE COEFFICIENTS OF WYES, TEES, AND MANIFOLDS

- Wyes
  Converging
  Diverging
  Different Velocities
  Different Angles
  Different Materials
  4-Way
- Fittings
  Welded
  Threaded
  Seams
  Butt-Joint
  Square
  Non-symmetric
  With Partitions

CHAPTER 8

RESISTANCE TO FLOW THROUGH BARRIERS UNIFORMLY DISTRIBUTED OVER THE CHANNEL CROSS SECTION: RESISTANCE COEFFICIENS OF GRIDS, SCREENS, POROUS LAYERS, AND PACKINGS

CHAPTER 9

RESISTANCE TO FLOW THROUGH PIPE FITTINGS AND LABYRINTH SEALS: RESISTANCE COEFFICIENTS OF THROTTLING DEVICES, VALVES, PLUGS, LABYRINTH SEALS, AND COMPENSATORS

- Devices
  - Flow Stopping
  - Throttling
  - Control
- Valves
  - Globe
  - Gate
  - Disk
  - Butterfly
  - Tray, with and without Bottom Guides
  - Conical
  - Spherical
  - Effects of Location
  - Effects of Sequence
  - Throttling
  - Disk Throttling
  - Check
  - Suction
  - Ball
- Faucets
- Taps
- Plugs
  - Conical
  - Spherical
  - Segmented
  - Rollerlike
- Plungers
- Labyrinth Seals
  - Angle-Globe
  - Dividing Walls
  - Gate, Plane-Parallel
- Positions of Fittings
- Transitions, Asymmetric
- Seals
  - Gate
  - Revolving
  - Spherical
  - Disks
  - Seats
- Valves in Pipes

CHAPTER 10
RESISTANCE TO FLOW PAST OBSTRUCTIONS IN A TUBE: RESISTANCE COEFFICIENTS OF SECTIONS WITH PROTURBERANCES, TRUSSES, GIRDERS, AND OTHER SHAPES

CHAPTER 11
RESISTANCE TO FLOW AT THE EXIT FROM TUBES AND CHANNELS: RESISTANCE COEFFICIENTS OF EXIT SECTIONS

*Most of the equipment described in this chapter is of Soviet design and manufacture. However, the illustrations are clear and explicit enough so that the reader can identify configurations that are similar to equipment used in the West.

In-line
Oval
Transverse

- Rotating Channels
- Plate
- Two-pass
- Shell-and-Tube
- Finned (Ribbed) Tube
- Notched Tube
- Air Heaters
- Electric Heaters
- Heating Furnace
- Wire Fins

Filters

- Roll Filters
- Bag
- Frame Filters
- Laboratory Filters
- Ventilation Filters
- Oil Filters
- Electrostatic Filters

Combined Effects of Bends-Wyes, Cross Section and Their Orientation

William Begell

CHAPTER

ONE

GENERAL INFORMATION AND ELEMENTS OF AERODYNAMICS AND HYDRAULICS OF PRESSURE SYSTEMS

1.1 GENERAL DIRECTIONS

1. A portion of the total energy that is expended to overcome the resistance forces arising from the flow of real (viscous) fluids through pipes and channels is irretrievably lost for a given system or network. This loss of energy is due to irreversible conversion of mechanical energy (the work of resistance forces) into heat. Therefore, the term fluid resistance, or hydraulic loss, represents the irreversible loss of total energy over a given system length. The ratio of the total stream energy (power) loss to the kinetic energy (power) or of the total pressure loss, averaged over the mass flow rate, to the velocity (dynamic) pressure over an arbitrary flow section is called the coefficient of hydraulic resistance.*

2. The total energy (pressure) loss is a substantially positive quantity. However, the difference in total energies (total pressures) over a given segment and, correspondingly, the coefficient of hydraulic resistance governed by this difference may sometimes take on negative values as well. This occurs when external forces with respect to the given flow appear in the channel. For example, when the fluid flow is aspirated through a side channel flush-mounted into the pipe wall at an angle exceeding 90° (see Chapter 3) and external flow (with respect to the side channel) takes place, the latter becomes the source of additional pressure. As a result, the flow in the side channel acquires additional energy, which, at some values of the ratio w_{∞}/w_0, can exceed the amount of energy expended for the mechanical work of the channel resistance forces.

*In what follows, the words "hydraulic" and "full" will often be omitted for briefness; more simple expressions "resistance of the section", "coefficient of section resistance", "pressure losses," or simply "loss" will mean hydraulic resistance and full pressure losses, respectively.

Another example is provided by a converging wye (see Chapter 7), where at some values of the ratio Q_{br}/Q_{ch} a portion of the flow energy in the channel is expended for aspiration of the fluid through a branch (ejector effect); that is, the flow in the branch acquires additional energy at the expense of the energy of the external (with respect to it) flow in the wye passage.

The negative values of the resistance in the above examples indicate that there is an increase, rather than a decrease, of the energy.

3. The basic reference data given in this book are the friction coefficients ζ_{fr} of straight pipe (channel) segments of length l, the friction coefficients per unit length (l/D = 1) of the segment,* and the local fluid resistances for pipe fittings, flow impedances, valves, and other elements of pipelines, as well as of some industrial equipment and devices.

4. When using this handbook and the well-known formula [Equation (1.65)] for evaluation of the resistance

$$\Delta p_{ov} = \zeta_{ov} \frac{\rho w^2}{2} = \zeta_{ov} \frac{\rho}{2} \left(\frac{Q}{F} \right)^2 , \tag{1.1}$$

it is assumed that all quantities in this equation are given, including all geometric parameters of the system component being calculated, except for the overall coefficient of fluid resistance $\zeta_{ov} = \zeta_{loc} + \zeta_{fr}$ (see Section 1.6). The unknown values are only those of ζ_{ov} and, correspondingly, of ζ_{loc} and ζ_{fr}.

5. In plots that refer to short pipes and channels whose ζ_{fr} is negligible compared with ζ_{loc}, the local resistance coefficient can be treated as the overall coefficient ζ.**

In graphs that refer to relatively long pipes and channels (diffusers, converging sections, smooth outlet pipes, and other components), the values of both the local resistance coefficients ζ_{loc} and the friction coefficients ζ_{fr} are generally given.

The resistance coefficients, plotted on graphs containing tentative data, are to be considered as overall coefficients ζ. In adding the pressure drops for the network considered, the frictional losses in the fittings are not to be taken into account again.

6. The values of ζ_{loc} given in this handbook include not only the local pressure drops (local resistance***) over a short segment adjacent to a pipe element of variable area configuration, but also the pressure drop downstream of this element. This is done to equalize the velocities over the straight exit section of the pipe. Inasmuch as the local losses are arbitrarily determined as the difference between the total losses and frictional losses in the straight exit section, the latter should also be taken into account.

---

*The friction coefficient ζ_{fr} is sometimes called the coefficient of linear frictional resistance. Henceforth the term "friction coefficient" will be used in a more general sense and will be understood to represent both ζ_{fr} and sometimes λ.

**Henceforth, for simplicity the subscript "ov" to the resistance coefficient ζ and to the total resistance Δp will be omitted.

***Local resistance here and further on refers to local losses of total pressure and not only to the fitting in which these losses occur.

7. In the case of a stream discharged from a fitting or some other element into a large plenum or into the atmosphere, the given coefficients of local resistance also take into account the velocity (dynamic) pressure losses $\rho w_{ex}^2/2$ at the exit.*

8. The values of the local resistance coefficients given in this handbook assume, except for special cases, uniform velocity distribution in the inlet section of the component. Such conditions are usually observed following a smooth inlet nozzle and for steady-state flows.

In the case of unsteady-state motion of liquid, the local resistance leads to the loss of flow stability, causing in it the formation of the unsteady-state eddies for the creation of which a certain energy is spent.[24,26]

9. The mutual effect of local hydraulic resistances in some cases leads to an increase in the values of ζ_{loc} of the considered shaped portions of pipelines, and in other cases to their decrease. In separate sections, for certain shaped portions the values of the coefficients of local resistances are given with the mutual effect taken into account. In particular, the values of ζ_d and ζ for diffusers (Chapters 5 and 11) are given as functions of the length of the preceding straight (inlet) section, and also of some previous shaped portions; for some elbows and branches (Chapter 6) the values of ζ_{loc} are given for the interacting separate elements (separate bends), etc. The mutual effect of local resistances is considered (in the scope of the data available) in Chapter 12.

10. In the general case, the pressure drop can be expressed as the sum of two terms, which are proportional to the first and second powers of the velocity, respectively:[28]

$$\Delta p = k_1 w + k_2 w^2 \ . \tag{1.2}$$

Correspondingly, the resistance coefficient is

$$\zeta \equiv \frac{\Delta p}{\rho w^2/2} = \frac{2k_1}{\rho w} + \frac{2k_2}{\rho} = \frac{A}{\mathrm{Re}} + B = \frac{A}{\mathrm{Re}} + k_3\zeta_{qu} \ , \tag{1.3}$$

where A is a constant; ζ_{qu} is taken as ζ for the region of the square law of resistance (similarity region $\mathrm{Re} \geq 10^4$). At very low Reynolds number ($\mathrm{Re} \leq 25$), the second term of Equation (1.2) can be neglected, while at very large Re one can neglect the first term of this expression and assume that $k_3 = 1$, Equation (1.3). Within $25 \leq \mathrm{Re} \leq 10^5$, the proportionality factor k_3 can be equal to, higher than, or less than unity.

11. The dependence of the local resistance coefficients on Reynolds number is given only in those cases when its effect is known or can be evaluated approximately.

12. In practice, the effect of Re on the local resistance is mainly evident at its small values ($\mathrm{Re} < 10^5$). Therefore, when $\mathrm{Re} \geq 10^5$–2×10^5, the local resistance coefficients may be as-

*The special literature often uses the expression "pressure losses for creation of velocity". Actually, the nonrecoverable pressure is not spent at all to create "velocity" in the system; there occurs a transition of static pressure into a dynamic one (the transformation of the pressure energy into kinetic energy). Dynamic pressure is, for the given system, lost only in the case if the flow leaves the given system (enters into the surrounding medium). In this case, the dynamic pressure is determined by flow velocity in the exit section of the system. For example, with the aid of a diffuser this velocity can be brought to a minimum and, consequently, the loss of dynamic pressure will be minimum.

sumed independent of the value of Re. At smaller values of Re, its effect should be taken into account.

13. When there is no indication of the Reynolds number at which the values of ζ were obtained, it may be assumed that the given resistance coefficient for turbulent flow ($\mathrm{Re} \geq 2 \times 10^3$) is practically independent of Re even when it is small. In the case of a laminar flow ($\mathrm{Re} < 2 \times 10^3$), these data can be used only for a very rough estimate of the resistance and only when $\mathrm{Re} \geq 10^2$.

14. Most values of the resistance coefficients given in this handbook, except when specified otherwise, were obtained at Mach numbers $\mathrm{Ma} \leq 0.3$. However, nearly all of the values of ζ, ζ_{loc}, and ζ_{fr} may also be used at higher subsonic velocities up to about Ma = 0.8. In some cases the dependence of ζ on Ma or λ_c is given.

15. Most of the values of the local resistance coefficients were obtained for commercial smooth pipe or channel walls. Because the effect of roughness on the local resistance has not been studied extensively, the walls of fittings and of other flow components considered in the handbook should be assumed smooth unless otherwise specified. The effect of roughness, which begins to manifest itself only at $\mathrm{Re} > 4 \times 10^4$, may be approximated by multiplying ζ by a factor of 1.1–1.2 (higher for large roughness).

16. The shape of the cross section of fittings and other parts is shown in cases where it affects the resistance coefficient or where the values of this coefficient were obtained for specific cross sections. When the shape of the cross section is not indicated or no additional data on the resistance of noncircular components are given, the resistance coefficient for a polygonal or rectangular cross section having an aspect ratio of a_0/b_0 = 0.5–2.0 should be assumed to have the same value as for a circular cross section.

17. The graphs and tables of resistance coefficients given in this handbook are based on either theoretical formulas or experimental data. In the latter case the values of ζ obtained from approximate formulas can differ somewhat from those given by the curves and in the tables. In such cases the formulas can be used only for tentative calculations.

18. The hydraulic resistance coefficients are independent of the kind of fluid* flowing through a pipeline system and are mainly governed by the geometry of the network element considered and, in some cases, by the flow regime (Reynolds or Mach number). The data given in the handbook apply equally well for the calculation of the resistance of purely hydraulic lines and for the calculation of gas, air, in various networks and equipment installations.

19. The hydraulic resistance of a network may be calculated by using tables such as Tables 1.14 to l.l6.

20. The values of the resistance coefficients given in the handbook are for components of pipes and channels of different shapes and parameters. However, in the design of new systems one should choose optimum shapes and parameters that would yield minimum values of the resistance coefficients.

The minimum values of ζ can be determined from the curves or tables of resistance plotted in the graphs or from the guidelines given in the explanatory part of each section of the handbook.

21. Table 1.1 shows the units of the most important physical quantities and their relation of SI units.

---

*If it is homogeneous and incompressible.

Table 1.1 Units of the most important physical quantities and their relation of SI units*

Name and dimension of quantity	Name and designation of unit	Relationship to SI units
Length (L)	meter (m)	–
	centimeter (cm)	1 cm = 10^{-2} m
	millimeter (mm)	1 mm = 10^{-3} m
	micrometer (μ)	1 μm = 10^{-6} m
	nanometer (nm)	1 nm = 10^{-9} m
	angström (Å)	1 Å = 10^{-10} m = 0.1 nm
Volume (L^3)	cubic meter (m^3)	–
	cubic centimeter (cm^3)	1 cm^3 = 10^{-6} m^3
	liter	1 liter = 10^{-3} m^3
Velocity (LT^{-1})	meter per second (m/s)	–
	kilometer per hour (km/h)	1 km/h = 0.277788 m/s
	centimeter per second (cm/s)	1 cm/s = 10^{-2} m/s
	meter per hour (m/h)	1 m/h = 277.788×10^{-6} m/s
	meter per minute (m/min)	1 m/min = 16.667×10^{-3} m/s
Acceleration (LT^{-2})	meter per second squared (m/s^2)	–
	centimeter per second squared (cm/s^2)	1 cm/s^2 = 10^{-2} m/s^2
Angular velocity (T^{-1})	radian per second (rad/s)	–
Rotation frequency (T^{-1})	reciprocal seconds (s^{-1})	–
	rotations per minute (rpm)	1 rpm = $\frac{1}{60}$ s^{-1}
	rotations per second (rps)	1 rps = 2 s^{-1}
Mass (M)	kilogram (kg)	–
	gram (g)	1 g = 10^{-3} kg
	ton (t)	1 t = 10^3 kg
	kilogram-force second squared per meter (kg-force s^2/m)	1 kg-force s^2/m = 9.80665 kg
Density ($L^{-3}M$)	kilogram per cubic meter (kg/m^3)	–
	kilogram per liter (kg/liter)	1 kg/liter = 1 g/ml = 1 kg/dm^3
	kilogram per cubic decimeter (kg/dm^3)	
	gram per milliliter (g/ml)	1 g/cm^3 = 1 t/m^3 = 10^3 kg/m^3
	gram per cubic centimeter (g/cm^3)	
	ton per cubic meter (t/m^3)	
	kilogram-force second squared per meter to fourth power (kg-force s^2/m^4)	1 kg-force s^2/m^4 = 9.80665 kg/m^3
Specific volume (L^3M^{-1})	cubic meter per kilogram (m^3/kg)	–
	cubic centimeter per gram (cm^3/g)	1 cm^3/g = 10^{-3} m^3/kg
	cubic meter per ton (m^3/t)	1 m^3/t = 10^{-3} m^3/kg
Momentum (impulse) (LMT^{-1})	kilogram meter per second (kg m/s)	–
	kilogram-force second (kg-force s)	1 kg-force s = 9.80665 kg m/s

*Table compiled in collaboration with L. P. Stotskii.

Table 1.1 (continued)

Name and dimension of quantity	Name and designation of unit	Relationship to SI units
Moment of momentum (moment of impulse) (L^2MT^{-1})	kilogram meter squared per second (kg m^2/s)	–
	kilogram-force meter second (kg-force m s)	1 kg-force m s = 9.80665 kg m^2/s
Force (gravity force, lift force); weight (LMT^{-2})	newton (N or m kg s^{-2})	–
	dyne (dyn)	1 dyn = 10^{-5} N = 10 μN
	kilogram-force (kg-force)	1 kg-force = 9.80665 N
	gram-force (g-force)	1 g-force = 9.80665 × 10^{-3} N = 9.80665 mN
	ton-force (t-force)	1 t-force = 9.80665 × 10^3 N = 9.80665 kN
Specific weight ($L^{-2}MT^{-2}$)	newton per cubic meter (N/m^3)	–
	dyne per cubic centimeter (dyn/cm^3)	1 dyn/cm^3 = 10 N/m^3
	kilogram-force per cubic meter (kg-force/m^3)	1 kg-force/m^3 = 980.665 N/m^3
Force moment; moment of a couple; torque (L^2MT^{-2})	newton meter (N m)	–
	dyne centimeter (dyn cm)	1 dyn cm = 10^{-7} N m
	kilogram-force meter (kg-force m)	1 kg-force m = 9.80665 N m
Power impulse (LMT^{-1})	newton second (N s)	–
	dyne second (dyn s)	1 dyn s = 10^{-5} N s
	kilogram-force second (kg-force s)	1 kg-force s = 9.80665 N s
Pressure; mechanical stress; moduli of elasticity, shear, rigidity; bulk modulus ($L^{-1}MT^{-2}$)	pascal (Pa or N/m^2 or m^{-1} kg s^{-2})	–
	kilopascal (kPa)	1 kPa = 10^3 Pa
	megapascal (MPa)	1 MPa = 10^6 Pa
	gigapascal (GPa)	1 GPa = 10^9 Pa
	dyne per square centimeter (dyn/cm^2)	1 dyn/cm^2 = 10^{-1} Pa
	kilogram-force per square centimeter or atmosphere (kg-force/cm^2 or atm)	1 kg-force/cm^2 = 98.0665 kPa = 0.0980665 MPa
	standard atmosphere (atm)	1 atm = 101.325 kPa = 0.101325 MPa
	bar (bar)	1 bar = 10^5 Pa = 10^{-1} MPa
	kilogram-force per square meter (kg-force/m^2)	1 kg-force/m^2 = 1 mm H_2O = 9.80665 Pa
	millimeter of water column (mm H_2O)	
	kilogram-force per square millimeter (kg-force/mm^2)	1 kg-force/mm^2=9.80665×10^6 Pa = 9.80665 MPa
	millimeter of mercury column (mm Hg)	1 mm Hg = 1 torr = 133.332 Pa
Pressure gradient ($L^{-2}MT^{-2}$)	pascal per meter (Pa/m)	–
Work, energy (L^2MT^{-2})	joule (J or m^2 kg s^{-2})	–

Table 1.1 (continued)

Name and dimension of quantity	Name and designation of unit	Relationship to SI units
	kilowatt hour (kW h)	1 kW h = 3.6×10^6 J
	erg (erg)	1 erg = 10^{-7} J
	kilogram-force meter (kg-force m)	1 kg-force m = 9.80665 J
	horsepower hour (hp h)	1 hp h = 2.648 MJ
	liter atmosphere (1iter atm)	1 1iter atm = 101.328 J
Specific work;	joule per kilogram (J/kg)	–
specific energy	erg per gram (erg/g)	1 erg/g = 10^{-4} J/kg
(L^2T^{-2})	kilogram-force meter per kilogram (kg-force m/kg)	1 kg-force m/kg = 9.80665 J
Power (L^2MT^{-3})	watt (W or m^2 kg s^{-3})	–
	kilowatt (kW)	1 kW = 10^3 W
	megawatt (MW)	1 MW =10^6 W
	erg per second (erg/s)	1 erg/s = 10^{-7} W
	kilogram-force meter per second (kg-force m/s)	1 kg-force m/s = 9.80665 W
Mass rate of flow (MT^{-1})	kilogram per second (kg/s)	–
	gram per second (g/s)	1 g/s = 10^{-3} kg/s
	kilogram per hour (kg/h)	1 kg/h = 277.778×10^{-6} kg/s
	kilogram per minute (kg/min)	1 kg/min 16.667×10^{-3} kg/s
	ton per hour (t/h)	1 t/h = 0.277778 kg/s
Volume rate of flow	cubic meter per second (m^3/s)	–
(L^3T^{-1})	cubic meter per hour (m^3/h)	1 m^3/h = 277.778×10^{-6} m^3/s
	liter per second (liter/s)	1 liter/s = 10^{-3} m^3/s
	liter per minute (liter/min)	1 liter/min = 16.667×10^{-6} m^3/s
	liter per hour (liter/h)	1 liter/h = 277.778×10^{-9} m^3/s
Dynamic viscosity	pascal second (Pa s)	–
($L^{-1}MT^{-1}$)	millipascal second (mPa s)	1 mPa s = 10^{-3} Pa s
	poise (ps)	1 ps = 10^{-1} Pa s
	centipoise (cps)	1 cps = 10^{-3} Pa s = 1 mPa s
	kilogram-force second per meter squared (kg-force s/m^2)	1 kg-force s/m^2 = 9.8066 Pa s
Kinematic viscosity	meter squared per second (m^2/s)	–
(L^2T^{-1})	centimeter squared per second (cm^2/s) stokes (st)	1 cm^2/s = 1 st = 10^{-4} m^2/s
	millimeter squared per second (mm^2/s)	1 mm^2/s = 10^{-6} m^2/s
	centistokes (cst)	1 cst = 1 mm^2/s = 10^{-6} m^2/s
	meter squared per hour (m^2/h)	1 m^2/h = 277.778×10^{-6} m^2/s
Surface tension	newton per meter (N/m)	–
(MT^{-2})	dyne per centimeter (dyn/cm)	1 dyn/cm = 10^{-3} N/m = 1 mN/m
	kilogram-force per meter (kg-force/m)	1 kg-force/m = 9.80665 N/m

Table 1.1 (continued)

Name and dimension of quantity	Name and designation of unit	Relationship to SI units
Thermodynamic temperature (θ)	Kelvin (K)	–
Centigrade temperature (θ)	centigrade degree (^oC)	$t_C = T_K$ (273.15; $1^oC = 1$ K
Quantity of heat; enthalpy (L^2MT^{-2})	joule (j)	–
	kilojoule (kJ)	1 kJ = 10^3 J
	megajoule (MJ)	1 MJ = 10^6 J
	gigajoule (GJ)	1 GJ = 10^9 J
	calorie (cal)	1 cal = 4.1868 J
	kilocalorie (kcal)	1 kcal = 4.1868 kJ
	megacalorie (Mcal)	1 Mcal = 4.1868 MJ
	gigacalorie (Gcal)	1 Gcal = 4.1868 GJ
Specific quantity of heat; specific enthalpy (L^2T^{-2})	joule per kilogram (J/kg)	–
	kilojoule per kilogram (kJ/kg)	1 kJ/kg = 10^3 J/kg
	calorie per gram (cal/g)	
	kilocalorie per kilogram (kcal/kg)	1 cal/g = 1 kcal/kg = 4.1868 kJ/kg
Heat capacity of the system ($L^2MT^{-2}\theta^{-1}$)	joule per kelvin (J/K)	–
	joule per centigrade degree (J/^{o}C)	1 J/^{o}C = 1 J/K
	calorie per centigrade degree (cal/^{o}C)	1 cal/^{o}C = 4.1868 J/K
	kilocalorie per centigrade degree (kcal/^{o}C)	1 kcal/^{o}C = 4.1868 kJ/K
Specific heat of the system ($L^2T^{-2}\theta^{-1}$)	joule per kilogram kelvin (J/kg K)	–
	kilojoule per kilogram kelvin (kJ/kg K)	1 kJ/kg K = 10^3 J/kg K
	calorie per gram centigrade degree (cal/g ^{o}C)	1 cal/g ^{o}C = 1 kcal/kg ^{o}C = 4.1868×10^3 J/kg K
Volumetric specific heat ($L^{-1}MT^{-2}\theta^{-1}$)	joule per cubic meter kelvin (j/m^3 K)	–
	kilocalorie per cubic meter centigrade degree (kcal/m^3 ^{o}C)	1 kcal/m^3 ^{o}C = 4.1868×10^3 J/kg K
Entropy of the system ($L^2MT^{-2}\theta^{-1}$)	joule per kelvin	–
	kilocalorie per kelvin (kcal/K)	1 kcal/K = 4.1868 kJ/kg
Specific entropy ($L^2T^{-2}\theta^{-1}$)	joule per kilogram kelvin (J/kg K)	–
	kilojoule per kilogram kelvin (kJ/kg K)	1 kJ/kg K = 10^3 J/kg K
	calorie per gram kelvin (cal/g K)	1 cal/g K = 1 kcal/kg K = 4.1868 kJ/kg K
Specific gas constant ($L^3T^{-2}\theta^{-1}$)	joule per kilogram kelvin (J/kg K)	–
	joule per kilogram centigrade degree (J/kg ^{o}C)	1 J/kg ^{o}C = 1 J/kg K

Table 1.1 (continued)

Name and dimension of quantity	Name and designation of unit	Relationship to SI units
	kilogram-force meter per kilogram centigrade degree (kg-force m/kg ^{o}C)	1 kg-force m/kg ^{o}C = 9.80665 kg K
Molar gas constant ($L^2MT^{-2}\theta^{-1}N^{-1}$)	joule per mole kelvin (J/mol K)	–
	joule per mole centigrade degree (J/mol ^{o}C)	1 J/mol ^{o}C = 1 J/mol K
	kilogram-force meter per mole centigrade degree (kg-force m/mol ^{o}C)	1 kg-force m/mol ^{o}C = 9.80665 J/mol K
Heat flux; heat power (L^2MT^{-3})	watt (W)	–
	kilowatt (kW)	1 kW = 10^3 W
	megawatt (MW)	1 MW = 10^6 W
	calorie per second (cal/s)	1 cal/s = 4.1868 W
	kilocalorie per hour (kcal/h)	1 kcal/h = 1.163 W
	megacalorie per hour (Mcal/h)	1 Mcal/h = 1.63 kW
	gigacalorie per hour (Gcal/h)	1 Gcal/h = 1.163 MW
Thermal conductivity ($LMT^{-3}\theta^{-1}$)	watt per meter kelvin (W/m K)	–
	watt per meter centigrade degree (W/m ^{o}C)	1 W/m ^{o}C = 1 W/m K
	calorie per second centimeter centigrade degree (cal/s cm ^{o}C)	1 cal/s cm ^{o}C = 418.68 W/m K
	kilocalorie per hour meter centigrade degree (kcal/h m ^{o}C)	1 kcal/h m ^{o}C = 1.163 W/m K
Heat transfer coefficient ($MT^{-3}\theta^{-1}$)	watt per square meter kelvin (W/m^2 K)	–
	watt per square meter centigrade degree (W/m^2 ^{o}C)	1 W/m^2 ^{o}C = 1 W/m^3 K
	kilocalorie per hour square meter centigrade degree (kcal/h m^2 ^{o}C)	1 kcal/h m^2 ^{o}C=1.1163 W/m^2 K
	calorie per second square centimeter centigrade degree (cal/s cm^2 ^{o}C)	1 cal/s cm^2 ^{o}C=418.68 W/m^2 K

1.2 PROPERTIES OF LIQUIDS AND GASES

Density of Flowing Medium

1. Values for the density of water and of some other commercial liquids at different temperatures are given in Tables 1.2 and 1.3, respectively.

Values for the density of some commerical gases under normal physical conditions (t = 0°C; p = 101.325 kPa), dry gas and for their relative density with respect to air, the density of which is taken to be unity, are given in Table 1.4.

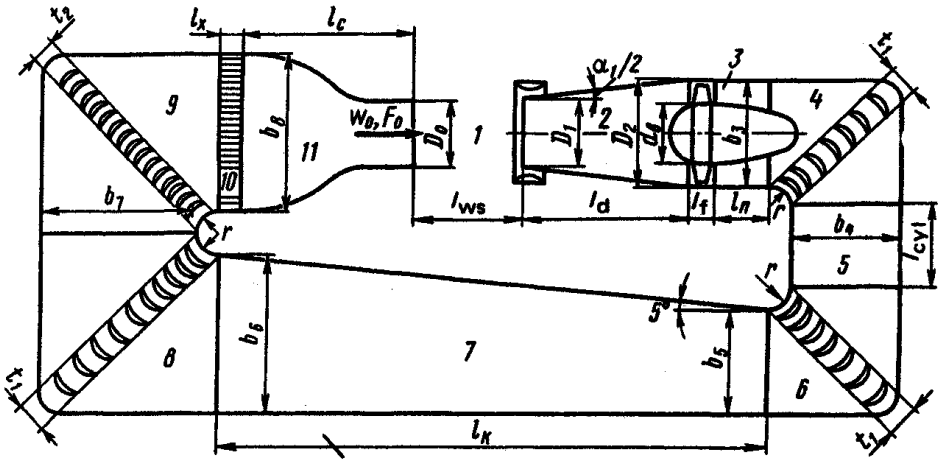

Figure 1.23. Schematic diagram of a closed-circuit, open-throat wind tunnel (dimensions in m): D_0 = 5; D_1 = 5.35; D_2 = 8; d_{in} = 4; b_3 = 8; b_4 = 8; b_5 = 8; b_6 = 12; b_7 = 12; b_8 = 12; t_1 = 2.2; t_2 = 1.5; $l^{work,sect}$ = 8; l_d = 13.5; l_f = 2; l_{tr} = 5; l_{cyl} = 6; l_{el} = 43.5; l_h = 1.5; l_{ch} = 13.5; r = 1.6; α_1 = 7°.

The aerodynamic calculations use the concept of the "quality" of a wind tunnel K, which is defined as the ratio of the velocity pressure in the working section of the tunnel to its total resistance.

For the present case,

$$K = \frac{0.5\rho w_0^2}{0.5\rho w_0^2 \sum_i^{11} \zeta_{0i}} = \frac{1}{0.30} \approx 3.3 \ .$$

REFERENCES

1. Abramovich, G. N., *Applied Gas Dynamics*, Nauka Press, Moscow, 1969, 824 p.
2. Altshul, A. D., *Hydraulic Resistance*, Nedra Press, Moscow, 1982, 224 p.
3. Altshul, A. D. and Kiselyov, P. G., *Hydraulics and Aerodynamics*, Stroiizdat Press, Moscow, 1975, 327 p.
4. Mochan, S. I. (Ed.), *Aerodynamic Calculation of Boiler Equipment*, Energiya Press, Leningrad, 1977, 255 p.
5. Branover, G. G., Gelfgat, Yu. M., and Vasiliyev, A. S., Turbulent flow in a plane perpendicular to the magnetic field, *Izv. Akad. Nauk Latv. SSR, Ser. Fiz.-Tekh. Nauk*, no. 4, 78–84, 1966.
6. Burdukov, A. P., Valukina, N. V., and Nakoryakov, V. E., Specific features of gas–liquid bubble mixture flow at small Reynolds numbers, *Zh. Prikl. Mekh. Tekh. Fiz.*, no. 4, 137–139, 1975.
7. Burdum, G. D., *Handbook of the International System of Units*, Izd. Standartov Press, Moscow, 1971, 231 p.
8. Vakina, V. V., Discharge of viscous fluids at high pressure drop through throttling washers, *Vestn. Mashinostr.*, no. 8, 93–101, 1965.
9. Vitkov, G. A. and Orlov, I. I., Hydraulic calculations of systems from their overall characteristics (heterogeneous systems). Deposited at VINITI 28.01.1980 under No. 337–80, Moscow, 1980, 16 p.

10. Vitkov, G. A. and Orlov, I. I., Hydraulic calculations of systems from their overall characteristics (homogeneous systems). Deposited at VINITI 28.01.1980 under No. 338–80, Moscow, 1980, 30 p.
11. Vulis, L. A., Paramonova, T. A., and Fomenko, B. A., Concerning the resistance to liquid metal flow in magnetic field, *Magn. Gidrodin.*, no. 1, 68–74, 1968.
12. Hartman, U. and Lazarus, F., Experimental study of mercury flow in a homogenous magnetic field, in *MHD-Flows in Channels*, Garris, L. (Ed.), Moscow, 1963, 262 p.
13. Geller, Z. I., Skobeltsyn, Yu. A., and Mezhdivo, V. Kh., Influence of rings on flow discharge from nozzles and orifices, *Izv. VUZ, Neft Gaz*, no. 5, 65–67, 1969.
14. Genin, L. G. and Zhilin, V. G., Influence of the longitudinal magnetic field on the coefficient of resistance to mercury flow in a round tube, *Teplofiz. Vys. Temp.*, vol. 4, no. 2, 233–237, 1966.
l5. Guizha, E. A., Stabilization of Forced Turbulent Flows Downstream of Local Resistances, Thesis (Cand. of Tech. Sci.), Kiev, 1986, 186 p.
16. Gil, B. B., An approximate method for calculating the velocity field in the MHD-separation problems, in *New Physical Methods for the Separation of Mineral Raw Materials*, pp. 59–68, Moscow, 1969.
17. Guinevskiy, A. S. and Solodkin, E. E., Hydarulic resistance of annular channels, in *Prom. Aerodin.*, no. 20, pp. 202–215, Oborongiz Press, Moscow, 1961.
18. Guinevskiy, A. S. and Solodkin, E. E., Aerodynamic characteristics of the starting length of a circular tube with a turbulent boundary layer flow, in *Prom. Aerodin.*, no. 12, pp. 155–168, Oborongiz Press, Moscow, 1959.
19. Grabovsky, A. M. and Kostenko, G. N., Bases of the use of SI units, in *Thermal and Hydraulic Calculations*, Tekhnika Press, Kiev, 1965, 106 p.
20. Gubarev, N. S., Local resistance of the high-pressure air-pipeline fittings, *Sudostroenie*, no. 3, 41–46, 1957.
21. Gukhman, A. A., *Introduction to the Similarity Theory*, Vysshaya Shkola Press, Moscow, 1963, 254 p.
22. Deich, M. E. and Zaryankin, A. E., *Hydrogasdynamics*, Energoatomizdat Press, Moscow, 1984, 284 p.
23. Elovskikh, Yu. P., Concerning the calculation of the parameters of gas in a pipeline, in *Pneumatics and Hydraulics*, no. 6, pp. 132–141, Moscow, 1979.
24. Zelkin, G. G., Hydraulic induction in discharging incompressible fluid into a full and empty pipeline with local resistances, *Inzh.-Fiz. Zh.*, vol. 47, no. 5, 856–857, 1984.
25. Zelkin, G. G., *Unsteady-State Flows in Local Resistance*, Minsk, 1981, 141 p.
26. Zelkin, G. G., The phenomenon of hydraulic induction in unsteady-state motion of incompressible viscous fluid, *Inzh.-Fiz. Zh.*, vol. 21, no. 6, 1127–1130, 1971.
27. Idelchik, I. E., Nozzles, in *Large Soviet Encyclopedia*, vol. 29, pp. 184–185, Sovetskaya Entsiklopediya Press, Moscow, 1953.
28. Idelchik, I. E., *Fluid Resistances (Physical and Mechanical Fundamentals)*, Gosenergoizdat Press, Moscow, 1954, 316 p.
29. Idelchik, I. E., Some notes concerning hydraulic losses in motion of a real fluid in forced systems, *Izv. VUZ, Energetika*, no. 9, 99–104, 1975.
30. Kiselyov, P. G., *Hydraulics, Fundamentals of the Mechanics of Liquid*, Energoizdat Press, Moscow, 1980, 360 p.
31. Komlev, A. F., Skobeltsyn, Yu. A., and Geller, Z. I., Influence of the shape and dimensions of the entrance on the discharge coefficient of outer cylindrical nozzles, *Izv. VUZ, Neft Gaz*, no. 11, 59–61, 1968.
32. Levin, V. B. and Chenenkov, A. I., Experimental investigation of the turbulent flow of an electrically conducting liquid in a tube in the longitudinal magnetic field, *Magn. Gidrodin.*, no. 4, 147–150, 1966.
33. Loitsyanskiy, L. G., *Mechanics of Liquids and Gases*, 5th ed. revised, Nauka Press, Moscow, 1978, 736 p.

34. Lyatkher, V. M. and Prudovskiy, A. M., *Hydrodynamic Modeling*, Energoatomizdat Press, Moscow, 1984, 392 p.
35. Makarov, A. N. and Sherman, M. Ya., *Calculation of Throttling Devices*, Metalloizdat Press, Moscow, 1953, 283 p.
36. Malkov, M. P. and Pavlov, K. F., *Handbook of Deep Cooling*, Gostekhizdat Press, Moscow, 1947, 411 p.
37. Mergertroid, V., Experimental MHD-flows in channels, in *MHD-Flows in Channels*, Garis, L. (Ed.), pp. 196–201, Moscow, 1963, p. 262.
38. Mikheev, M. A., Filimonov, S. S., and Khrustalyov, B. A., *Convective and Radiative Heat Transfer*, Moscow, 1960.
39. Monin, A. S. and Yaglom, A. M., *Statistical Hydromechanics*, Part I, Fizmatizdat Press, Moscow, 1965, 640 p.; Part II, Nauka Press, Moscow, 1967, 720 p.
40. Nevelson, M. I., *Centrifugal Ventilators*, Gosenergoizdat Press, Moscow, 1954, 335 p.
41. Petukhov, B. S. and Krasnoshchekov, E. A., Hydraulic resistance in viscous nonisothermal motion of fluid in tubes, *Zh. Tekh. Fiz*., vol. 28, no. 6, 1207–1209, 1958.
42. Petukhov, B. S., *Heat Transfer and Resistance in Laminar Liquid Flow in Tubes*, Energiya Press, Moscow, 1967, 412 p.
43. Pisarevskiy, V. M. and Ponomarenko, Yu. B., Concerning variations in the gas density and pressure in local resistances of pipelines, *Izv. VUZ, Mashinostroenie*, 66–70, 1979.
44. Prandtl, L., *Fundamentals of Hydro- and Aerodynamics*, McGraw-Hill, 1934, Russian translation — GIIL Press, Moscow, 1953, 520 p.
45. *Industrial Aerodynamics (Trudy TsAGI)*, no. 7 (*Air Conduits*), Moscow, 1954, 154 p.
46. Rikhter, G., *Hydraulics of Pipelines*, ONTI Press, Moscow, 1936, 340 p.
47. Sedov, L. I., *Self-Similar and Dimensional Methods in Mechanics*, Nauka Press, Moscow, 1967, 428 p.
48. Skobeltsyn, Yu. A., Mezhidov, V. Kh., and Geller, Z. I., Flow discharge from inner cylindrical nozzles with incomplete contraction due to a baffle or tapering, *Izv. VUZ, Neft Gaz*, no. 9, 71–74, 1967.
49. Skobeltsyn, Yu. A., Bashilov, E. B., and Geller, Z. I., Flow discharge from external cylindrical capillary nozzles, *Izv. VUZ, Neft Gaz*, no. 10, 80–84, 1971.
50. Solodkin, E. E. and Guinevskiy, A. S., *Turbulent Flow of Viscous Fluid over the Starting Lengths of Axisymmetric and Plane Channels*, Oborongiz Press, Moscow, 1957 (Trudy TsAGI No. 701).
51. Kiselev, P. G. (Ed.), *Handbook of Hydraulic Calculations*, 4th ed., Moscow, 1972, 312 p.
52. *Handbook of Chemistry*, Vol. 1, Goskhimizdat Press, Moscow, 1951, 1072 p.
53. Vargaftik, N. B. (Ed.), *Handbook of the Thermal Properties of Liquids and Gases*, Nauka Press, Moscow, 1972, 720 p.
54. Stepanov, P. M., Ovcharenko, I. Kh., and Skobeltsyn, Yu. A., *Handbook of Hydraulics for Land Reclaimants*, Kolos Press, Moscow, 1984, 207 p.
55. Stochek, N. P. and Shapiro, A. S., *The Hydraulics of Liquid-Propellant Rocket Engines*, Moscow, 1978, 127 p.
56. Tananayev, A. V., *The Flow in the MHD-Equipment Channels*, Atomizdat Press, Moscow, 1979, 364 p.
57. Blum, E. Ya., Zaks, M. V., Ivanov, U. I., and Mikhailov, Yu. A., *Heat and Mass Transfer in the Electromagnetic Field*, Riga, 1967, 223 p.
58. Fabrikant, N. Ya., *Aerodynamics*, Gostekhizdat Press, Moscow, 1964, 814 p.
59. Filippov, G. V., On turbulent flow over starting lengths of straight circular tubes, *Zh. Tekh. Fiz*., vol. 28, no. 8, 1823–1828, 1958.
60. Frenkel, V. Z., *Hydraulics*, Gosenergoizdat Press, Moscow, 1956, 456 p.
61. Khozhainov, A. I., Turbulent liquid metal flow in the MHD-channels of round cross section, *Zh. Tekh. Fiz*., vol. 36, no. 1, 147–150, 1966.
62. Jen, P., *Stalling Flows*, vol. 1, 298 p.; vol. 2, 280 p.; vol. 3, 300 p., Mir Press, Moscow, 1972.

63. Shiller, L., *Flow of Liquids in Pipes*, Tekhizdat Press, Moscow, 1936, 230 p.
64. Schlichting, H., *Boundary Layer Theory*, Nauka Press, Moscow, 1974, 711 p.
65. Shcherbinin, E. V., An electrically conducting liquid in the intrinsic magnetic field of the electric current, *Magn. Gidrodin.*, no. 1, 68–74, 1975.
66. Shchukin, V. K., *Heat Transfer and Hydrodynamics of Internal Flows in the Fields of Body Forces*, Mashinostroenie Press, Moscow, 1970, 331 p.
67. Elterman, V. M., *Air Screens*, Mashinostroenie Press, Moscow, 1966, 164 p.
68. Yuriev, B. N., *Experimental Aerodynamics*, ONTI Press, Moscow, 1936, 315 p.
69. Barach, A. L., The flow of heavy gases through small orifices, including comparison between oxygen and perfluoropropane, C_3F_8 perfluorobutane, C_4F_{10}, *Am. J. Med. Sci*., vol. 243, no. 1, 30–34, 1962.
70. Benedict, P. and Carlucci, A., *Handbook of Specific Losses in Flow Systems*, Plenum Press, Data Division, New York, 1970, 30 p.
71. Boussinesq, I., Memoir sur l'influence des frottements dans les mouvements reguliers des fluides, *J. Math. Pur Appl*., no. 13, 377, 1868.
72. Forst, T. H., The compressible discharge coefficient of a Borda pipe and other nozzles, *J. R. Aeronaut. Soc*., no. 641, 346–349, 1964.
73. Iversen, H. W., Orifice coefficients for Reynolds numbers from 4 to 50,000, *Trans. ASME*, vol. 78, no. 2, 359–364, 1956.
74. Jackson, R. A., The compressible discharge of air through small thick plate orifices, *Appl. Sci. Res.*, vol. A13, nos. 4–5, 241–248, 1964.
75. Kolodzie, P. A., Jr. and Van Winkle, M., Discharge coefficients through perforated plates, *AIChE J.*, vol. 3, 305–312, 1959.
76. Maa Yer., Ru., Gas flow through an annular gap, *J. Vac. Sci. Technol.*, vol. 5, 153–154, 1968.
77. Murakami, M. and Katayama, K., Discharge coefficients of fire nozzles, *Trans. ASME*, vol. D88, no. 4, 706–716, 1966.
78. Wielogorski, J. W., Flow through narrow rectangular notches, *Engineer*, vol. 221, 963–965, 1966.